Stainless steel vibration eliminators, nickel-plated connections

CTCY-EN - 22.1-7 / 06-2022

→ EVCYAC

■ Applications

- Reduction of the mechanical vibrations transmitted by the compressor to the discharge, liquid, suction and oil return lines, and indirectly, of the noises they generate, and elimination of stresses linked with piping thermal expansion in refrigerating and air conditioning installations.
- The vibration eliminators have no effect on the reduction of the noises caused by the gas pulsations in the discharge lines. This is the role of the mufflers SCY.

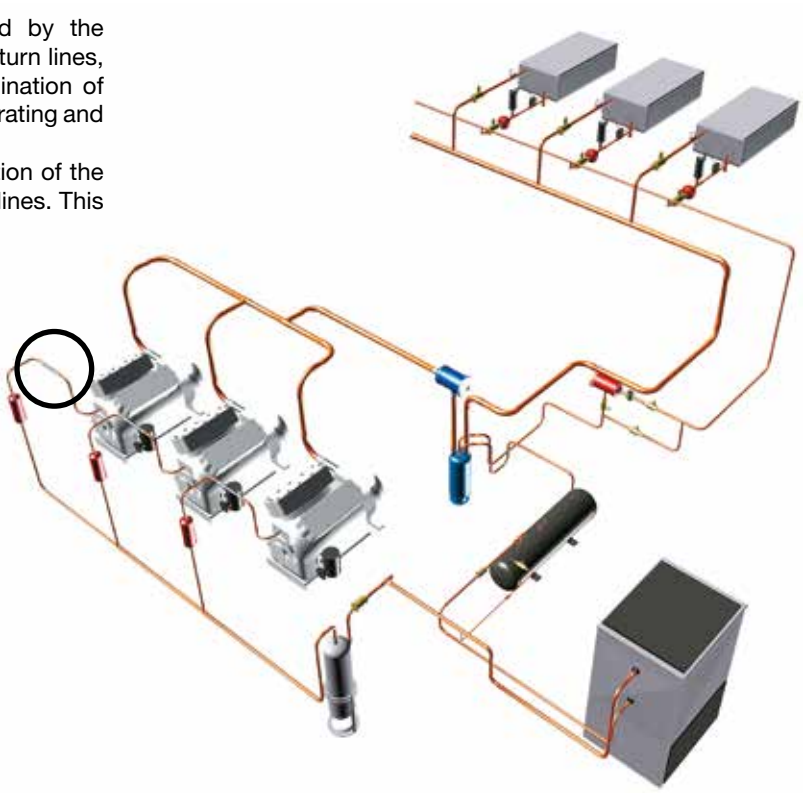

■ Functional features

- Products are compatible with HCFCs, HFCs, HFOs, CO_2, as well as with their associated oils and additives. Products are designed for use of non-hazardous refrigerants from group 2 of PED 2014/68/EU. To use CARLY components with fluids of the hydrocarbon group 1, contact CARLY technical department.
- Product classification in CE categories is performed using the PED 2014/68/EU table, corresponding to a nominal diameter-based selection.
- Flexible wavy stainless steel metallic hoses constituted of parallel waves from a tube welded end to end and covered with a stainless steel wire braid (see sketch n° 2).
- Nickel-plated steel connections, for the standards models.
- Vibration eliminators are cleaned and dried before individual packaging under heat-sealed plastic tubular film.

Possible customization on request, even for unit needs :

- Specific lengths
- Stainless steel connections, for better resistance to corrosive environments (e.g. railway and maritime application, ...)
- Specific flanges or connections

■ CARLY advantages

- Maximal working pressure: until 46 bar.
- Specifically designed in order to resist frost and major temperature shifts, from - 40 °C to + 140 °C.
- Principle for connecting the components together (stainless steel hose + ait-tightness ring + braid + connection) by stainless steel TIG weld. Contrary to a braze, this weld eliminates all risks of deteriorating the vibration eliminator by heat transfer during connection to the installation's piping.
- Very high mechanical resistance to corrosion.
- Long brazed or welded connections, in order to facilitate connection to installation.
- Unity helium air-tightness inspection.
- Marking meets perfectly the requirements of PED 2014/68/EU.

CTCY-EN - 22.1-7 / 06-2022

Stainless steel vibration eliminators, nickel-plated connections

➔ EVCYAC

■ Warning

Before selecting or installing any component, please refer to the chapter 0 - **WARNING**.

■ General assembly precautions

The installation of a component in a refrigeration system by a skilled professional, requires some precautions:

- Some are specific to each component, and in this case, they are specified in the **RECOMMENDATIONS SPECIFIC** part defined hereafter ;
- Other are general to all CARLY components, they are presented in the chapter 115 – **GENERAL ASSEMBLY PRECAUTIONS**.
- The recommendations relating to the CARLY components for the subcritical CO_2 applications are also developed in chapter 115 – **GENERAL ASSEMBLY PRECAUTIONS**.

■ Recommendations specific to EVCYAC vibration eliminators

- Mounting of vibration eliminators should be performed:
  - ➔ on a piping straight-up part
  - ➔ As close as possible of the vibration generator: compressor, evaporator, condenser, etc... imperatively in horizontal position at compressor's suction.
  - ➔ without twisting, extension or axial compression stress. The vibration eliminator must be perfectly straight.
  - ➔ preferably 90° in relation to vibration source (refer to sketch No1).
- Warning, when put under pressure, the vibration eliminators can present a slight extension (about 2 % of initial length); it is therefore necessary to take this into account during the assembly operation.
- For the brazing operation, we recommend the use of a filler metal with a high silver content (38 % minimum) and the use of a neutral gas inside the vibration eliminators in order to not trigger internal corrosion phenomena.
- During the brazing operation, be careful that the scouring flux used does not come in contact with the hose and its braid.
- The connections' nickel lining holds ready nicely during temperature increase; it is nevertheless recommended to protect the connections after brazing with an appropriate product, against corrosion risks.
- Provide for clamping of the vibration eliminator ends that are located opposite the vibration source (refer to sketch No1).
- All arrangements must be taken, in order to prevent water concentration that may freeze and then deteriorate the vibration eliminator.
- For semi-static use, the assembly must be qualified by the machine manufacturer. The product lifetime can vary enormously depending on:
  - ➔ Pulsating effects and water hammers
  - ➔ Pressure variations
  - ➔ Rapid and intermittent movements
  - ➔ Frequent temperature changes
  - ➔ Environment
- When properly assembled and used for the intended purpose, vibration eliminators are durable, robust and virtually maintenance-free products. Vibration eliminators shall be subject to regular visual inspection by the user. In particular, attention should be paid to the possible presence of damage such as buckling, braid failure, corrosion and dirt. The component is to be replaced as soon as one of these anomalies appears.

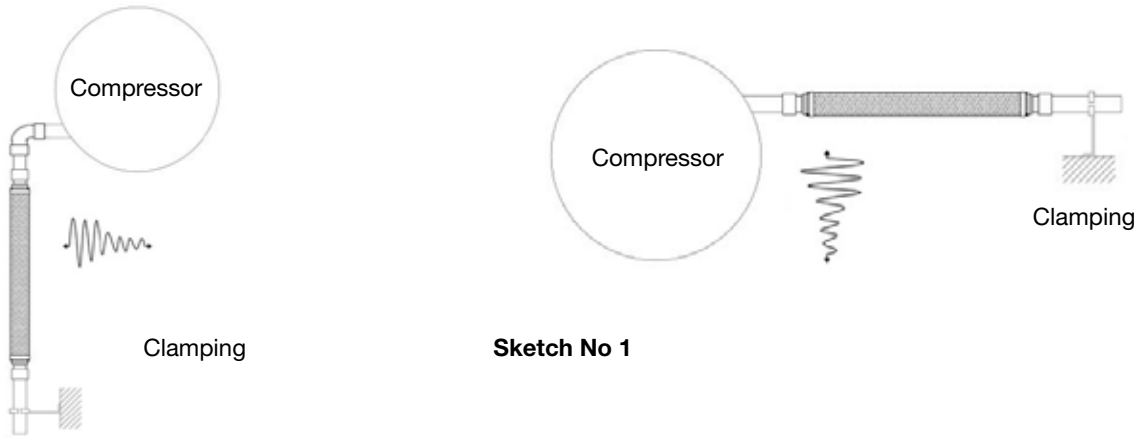

Sketch No 1

Stainless steel vibration eliminators, nickel-plated connections

CTCY-EN - 22.1-7 / 06-2022

→ EVCYAC

■ Technical features

CARLY references	Connections To solder ODF inch	CARLY references	Connections To solder ODF mm	Dimensions mm				
				Ø1	Ø2	L1	L2	L3
EVCYAC 2 S	1/4	EVCYAC 2 MMS	6,0	14	9	200	6	16
EVCYAC 3 S	3/8	EVCYAC 3 MMS	10,0	18	13	221	9	21
EVCYAC 4 S	1/2	EVCYAC 4 MMS	12,0	19	16	242	11	24
EVCYAC 5 S	5/8	EVCYAC 5 MMS	15,0	25	19	288	14	29
EVCYAC 6 S	3/4	EVCYAC 6 MMS	18,0	30	22	318	16	33
EVCYAC 7 S/MMS	7/8	EVCYAC 7 S/MMS	22,0	30	25	318	18	42
EVCYAC 9 S	1 1/8	EVCYAC 9 MMS	28,0	36	32	360	20	51
EVCYAC 11 S/MMS	1 3/8	EVCYAC 11 S/MMS	35,0	47	40	408	30	56
EVCYAC 13 S	1 5/8	EVCYAC 13 MMS	42,0	58	48	472	30	68
EVCYAC 17 S/MMS	2 1/8	EVCYAC 17 S/MMS	54,0	69	60	560	40	88
EVCYAC 21 S	2 5/8	EVCYAC 21 MMS	67,0	84	75	670	50	105
EVCYAC 25 S	3 1/8	EVCYAC 25 MMS	80,0	107	88	760	55	124
EVCYAC 29 S	3 5/8	EVCYAC 29 MMS	88,9	132	102	895	55	142
EVCYAC 33 S	4 1/8	EVCYAC 33 MMS	108,0	132	114	930	60	160

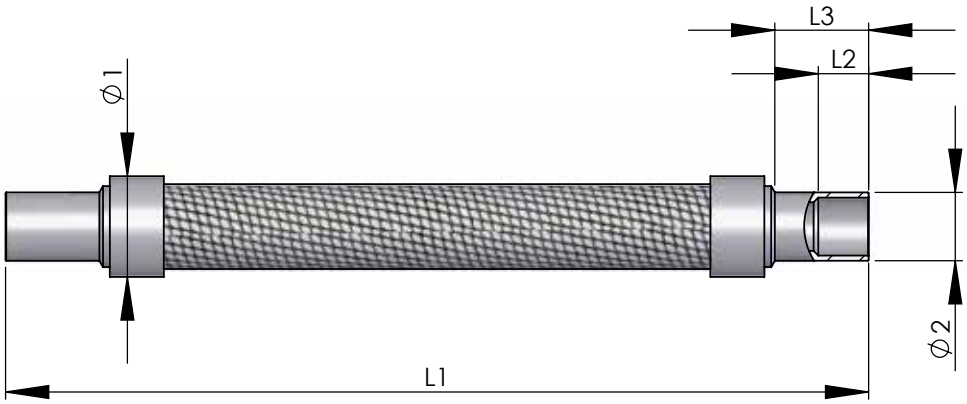

CTCY-EN - 22.1-7 / 06-2022

Stainless steel vibration eliminators, nickel-plated connections

→ EVCYAC

■ Technical features

CARLY references	Connec-tions To solder ODF inch	CARLY references	Connec-tions To solder ODF inch	Maximal working pressure PS bar	Working pressure (1) PS BT bar	Maximal working temperature TS maxi* °C	Minimal working temperature TS mini °C	Working temperature (1) TS BT °C	CE Category (2)
EVCYAC 2 S	1/4	**EVCYAC 2 MMS**	6,0	46	15	140	-40	-30	Art4§3
EVCYAC 3 S	3/8	**EVCYAC 3 MMS**	10,0	46	15	140	-40	-30	Art4§3
EVCYAC 4 S	1/2	**EVCYAC 4 MMS**	12,0	46	15	140	-40	-30	Art4§3
EVCYAC 5 S	5/8	**EVCYAC 5 MMS**	15,0	46	15	140	-40	-30	Art4§3
EVCYAC 6 S	3/4	**EVCYAC 6 MMS**	18,0	42	15	100	-40	-30	Art4§3
EVCYAC 7 S/MMS	7/8	**EVCYAC 7 S/MMS**	22,0	42	15	100	-40	-30	Art4§3
EVCYAC 9 S	1 1/8	**EVCYAC 9 MMS**	28,0	42	15	100	-40	-30	Art4§3
EVCYAC 11 S/MMS	1 3/8	**EVCYAC 11 S/MMS**	35,0	35	15	120	-40	-30	I
EVCYAC 13 S	1 5/8	**EVCYAC 13 MMS**	42,0	35	15	120	-40	-30	I
EVCYAC 17 S/MMS	2 1/8	**EVCYAC 17 S/MMS**	54,0	34	15	120	-40	-30	I
EVCYAC 21 S	2 5/8	**EVCYAC 21 MMS**	67,0	25	15	120	-40	-30	I
EVCYAC 25 S	3 1/8	**EVCYAC 25 MMS**	80,0	20	15	120	-40	-30	I
EVCYAC 29 S	3 5/8	**EVCYAC 29 MMS**	88,9	20	15	120	-40	-30	I
EVCYAC 33 S	4 1/8	**EVCYAC 33 MMS**	108,0	20	15	120	-40	-30	I

(1) The working pressure is limited to the PS BT value when working temperature is lower than or equal to TS BT value.

(2) Classification by diameter, according to PED 2014/68/EU (refer to chapter 0).

** Other WT (working temperatures) possible on demand.*

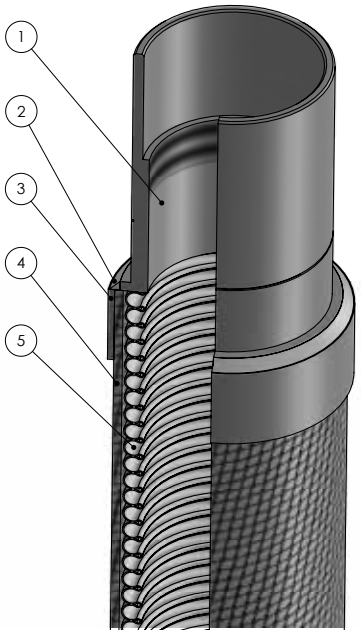

1 - Nickel plated steel connections (or, stainless steel, on request)

2 - TIG weld

3 - Stainless steel ring Inox 1.4307 - AISI 304L 1.

4 - Stainless steel wire braid Inox 1.4307 - AISI 304L 1.

5 - Flexible wavy stainless steel hose Inox 1.4404 - AISI 316L ou 1.4541 AISI EVCYAC 2 to 17, flexible type 1-10 according EN ISO 10380 EVCYAC 21 to 33, flexible type 2-10 according EN ISO 10380

Sketch No 2

Stainless steel vibration eliminators, nickel-plated connections

CTCY-EN - 22.1-7 / 06-2022

→ EVCYAC

■ Weights and packaging

CARLY references	Unit weight kg		Packaging number of pieces
	With packaging	Without packaging	
EVCYAC 2 S et MMS	0,06	0,06	1
EVCYAC 3 S & MMS	0,07	0,07	1
EVCYAC 4 S et MMS	0,10	0,10	1
EVCYAC 5 S & MMS	0,15	0,15	1
EVCYAC 6 S et MMS	0,25	0,25	1
EVCYAC 7 S/MMS	0,25	0,25	1
EVCYAC 9 S et MMS	0,43	0,42	1

CARLY references	Unit weight kg		Packaging number of pieces
	With packaging	Without packaging	
EVCYAC 11 S/MMS	0,77	0,76	1
EVCYAC 13 S et MMS	1,36	1,35	1
EVCYAC 17 S/MMS	2,13	2,12	1
EVCYAC 21 S et MMS	3,90	3,85	1
EVCYAC 25 S & MMS	5,65	5,60	1
EVCYAC 29 S et MMS	8,60	8,55	1
EVCYAC 33 S & MMS	9,20	9,15	1