CTCY-EN - 1.25-1 / 09-2024

Filter driers

→ DCYT-P9 (90 bar) / DCYT-P14 (140 bar)

■ Applications

90bar - 140bar

CO2 TRANSCRITICAL

- Filtering and drying of refrigerants for liquid lines of refrigerating and air conditioning installations, running with high working pressures with CO_2 in trancritical compression systems.

NEW

100% Moleculare sieves

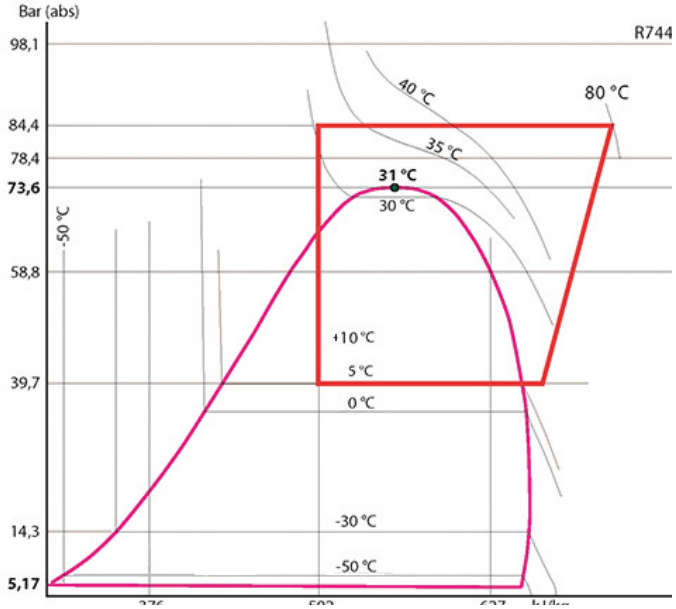

■ Functional features

- Optimized for small capacity refrigeration untis.
- Products are compatible with CO_2, as well as with its associated oils and additives. Products are designed for use of non-hazardous refrigerants from group 2 of PED 2014/68/EU.
- Product classification in CE categories is done with the PED 2014/68/EU table, corresponding to a volume-based selection.
- Hermetically sealed outer steel enclosure with paint to ensure a high resistance to corrosion.
- Filtering at outlet preventing propagation within the circuit of particles.
- No desorption, even at a high temperature.
- Copper plated steel connections till 3/4".

■ CARLY advantages

- Maximal working pressure: up to 140 bar with CO_2 in transcritical compression systems.
- Great drying capacity at all temperatures (100% molecular sieves)
- Initial drying capacity guaranteed by oven drying and airtight sealing.
- Increased particle retention capacity thanks to dual stage filtration : 50μm at the inlet and 25μm at the outlet.

CTCY-EN - 1.25-1 / 09-2024

Filter driers

➔ DCYT-P9 (90 bar) / DCYT-P14 (140 bar)

■ Warning

Before selecting or installing any component, please refer to the chapter 0 of CARLY technical catalogue - **WARNING**.

■ General assembly precautions

The installation of a component in a refrigeration system by a skilled professional, requires some precautions:

- Some are specific to each component, and in this case, they are specified in the **RECOMMENDATIONS SPECIFIC** part defined hereafter ;
- Other are general to all CARLY components, they are presented in the chapter 115 of CARLY technical catalogue – **GENERAL ASSEMBLY PRECAUTIONS**.

■ Recommendations specific to DCYT-P9 ans DCYT-P14 filter driers

- Filter driers are to be mounted on the liquid line between the receiver and the expansion element.
- The refrigerant flow direction is indicated by an “IN” mark in the inlet shell of the filter drier and by an arrow on the filter drier tag. It must be necessarily respected.
- We recommend the vertical mounting of the filter drier with a top-down fluid flow direction in order to favour its filling when in operation and a rapid flow of the fluid when the installation is shut down.
- We recommend the use of a brasing at 38 % silver minimum for the brasing of the copper coated steel connections.
- Be careful to properly select the solenoid valves located downstream of the filter driers; their over-sizing could cause liquid hammer phenomena hindering the filter driers’ mechanical behaviour FILTRY-P9 (90 bar) ; these liquid hammer phenomena can originate from other sources, in longpiping installations.
- Never install the filter driers in an area of the circuit that can be isolated.
- Never trap the refrigerant in its liquid state (between a check valve and a solenoid valve, for instance).
- The filter driers must be changed :
  - ➔ after each intervention on the installation requiring the opening of the circuit
  - ➔ when the liquid indicator indicates an abnormal humidity content
  - ➔ when the pressure loss measured in the dewatering filter is too high
  - ➔ at least once a year as a measure of precaution
- Filter drier efficiency and refrigerant moisture content should be checked using liquid sight glasses.
- Make sure that the piping can support without deformation the weight of the filter drier ; otherwise, plan the attachment of the filter drier with a clamp on a stable part of the installation.

Filter driers

→ DCYT-P9 (90 bar) / DCYT-P14 (140 bar)

■ Special precautions for components used with CO_2 in subcritical and transcritical systems

- The maximal working pressure and the power variations of the installation must be taken into account as of its design, in order to select all the components consequently.
- The pressure of the circuit during the stop phases must also be taken into account, because it can be very high, due to the pressure equalization according to the ambient temperature; several solutions exist to limit and control this pressure when the installation is stopped.
  - Design of the installation allowing to resist to this pressure.
  - Implementation of a « buffer » volume of storage or expansion (receiver).
  - Installation of a secondary circuit with valve or solenoid valve, allowing the fluid transfer to the coldest point, or the less high in pressure of the installation.
  - Implementation of a small separate refrigeration unit, to maintain the liquid temperature at a pressure lower than the maximal working pressure ; it is so far the most effective technical solution, but with a major drawback, which is the power failure (safety unit to be considered, or backup power supply).
- The implementation on the liquid line of a filter drier **DCYT-P9** or **DCYT-P14** is highly recommended. Serious problems can occur in the presence of moisture, such as expansion valve blocking and formation of dry ice and even carbonic acid. To avoid this, it is imperative to limit the circuit openings in order to avoid air introduction, causing the condensation in the pipes, and to proceed to a high evacuation of the installation, before any commissioning or restarting.
- For an operation with CO_2 at low temperature, provide thermal insulation on the components which can be covered by frost.
- There is no incompatibility between CO_2 and the main metallic materials commonly used in refrigeration systems (steel, copper, brass...)
- On the other hand, there is a real compatibility issue between CO_2 and polymers. For example, swelling phenomena and internal explosion of the seal are possible. Carly filter drier **DCYT-P9** and **DCYT-P14** do not have polymer gaskets directly in contact with CO_2.

CTCY-EN - 1.25-1 / 09-2024

Filter driers

→ DCYT-P9 (90 bar) / DCYT-P14 (140 bar)

■ Selection table

CARLY references	Connections to solder ODF		Capacity	Dehydratable refrigerant capacity kg of refrigerant
	inch	mm	kw(1)	R744 24 °C
DCYT-P14 032 S	1/4	-	5,2	2,5
DCYT-P14 082 S	1/4	-	5,2	6
DCYT-P14 083 S	3/8	-	14,1	6
DCYT-P9 163 S	3/8	-	14,1	19,2
DCYT-P9 164 S	1/2	-	24,6	19,2
DCYT-P9 165 S/MMS	5/8	16	39,5	19,2
DCYT-P9 304 S	1/2	-	26,8	45,2
DCYT-P9 305 S/MMS	5/8	16	41	45,2
DCYT-P9 306 S	3/4	-	54,4	45,2
DCYT-P9 307 S/MMS	7/8	22	64,9	45,2

(1) Capacity in kw for Tk = 30°C and To = -15°C with DeltaP = 0.07b

Nota: the diameter of connections must not be inferior to the diameter of the main pipe.

Filter driers

→ DCYT-P9 (90 bar) / DCYT-P14 (140 bar)

■ Technical features

CARLY references	Connections types [1]	Filtering surface	Volume of desiccants	Dimensions		
				Ø1	Ø2	L
		cm²	cm³	mm	mm	mm
DCYT-P14 032 S	2	52	29	48,3	55	108
DCYT-P14 082 S	2	117	90	48,3	55	161
DCYT-P14 083 S	2	117	90	48,3	55	161
DCYT-P9 163 S	2	200	215	76,1	84	153
DCYT-P9 164 S	2	200	215	76,1	84	157
DCYT-P9 165 S/MMS	2	200	215	76,1	84	161
DCYT-P9 304 S	2	371	500	76,1	84	239
DCYT-P9 305 S/MMS	2	371	500	76,1	84	243
DCYT-P9 306 S	2	371	500	76,1	84	248
DCYT-P9 307 S/MMS	2	371	500	76,1	84	259

[1] Chapter "Connection features and drawings" (refer to chapter 114 of CARLY technical catalogue).

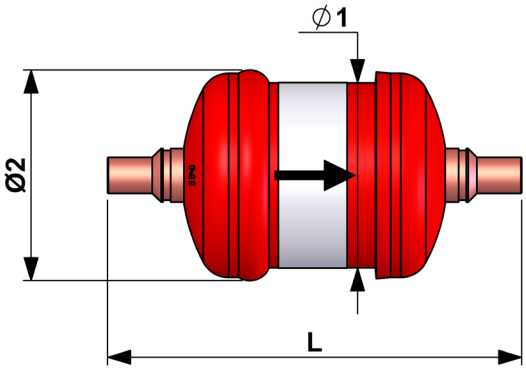

CARLY references	Volume (V)	Working pressure[1]	Maximal Working pressure (PS BT)	Maximal working temperature (TS max)	Minimal working temperature (TS min)	Working temperature[1] (TS BT)	CE Category [2]
	L	bar	bar	°C	°C	°C	
DCYT-P14 032 S	0,09	140bar	90	100	-40	-10	Art4§3
DCYT-P14 082 S	0,17		90	100	-40	-10	Art4§3
DCYT-P14 083 S	0,17		90	100	-40	-10	Art4§3
DCYT-P9 163 S	0,41	90bar	67	100	-40	-10	Art4§3
DCYT-P9 164 S	0,41		67	100	-40	-10	Art4§3
DCYT-P9 165 S/MMS	0,41		67	100	-40	-10	Art4§3
DCYT-P9 304 S	0,73		67	100	-40	-10	Art4§3
DCYT-P9 305 S/MMS	0,73		67	100	-40	-10	Art4§3
DCYT-P9 306 S	0,73		67	100	-40	-10	Art4§3
DCYT-P9 307 S/MMS	0,73		67	100	-40	-10	Art4§3

[1] The working pressure is limited to the PS BT value when working temperature is lower than or equal to TS BT value.

[2] Classification by volume, according to PED 2014/68/EU (refer to Chapter 0 of CARLY technical catalogue).

Filter driers

CTCY-EN - 1.25-1 / 09-2024

→ DCYT-P9 (90 bar) / DCYT-P14 (140 bar)

■ Weights and packaging

CARLY references	Unit weight kg		Packaging number of pieces
	With packaging	Without packaging	
DCYT-P14 032 S	0,51	0,38	16
DCYT-P14 082 S	0,71	0,58	16
DCYT-P14 083 S	0,71	0,58	16
DCYT-P9 163 S	1,27	1,14	6
DCYT-P9 164 S	1,29	1,16	6
DCYT-P9 165 S/MMS	1,29	1,16	6
DCYT-P9 304 S	1,98	1,85	6
DCYT-P9 305 S/MMS	1,98	1,85	6
DCYT-P9 306 S	2,01	1,88	6
DCYT-P9 307 S/MMS	2,05	1,92	6